FLOWSERVE



FRBH

Worthington® Heavy-Duty Paper Stock and Process Pump

Bulletin PS-10-16d (E/A4)

FLOWSERVE

Pump Supplier To The World

Flowserve is the driving force in the global industrial pump marketplace. No other pump company in the world has the depth or breadth of expertise in the successful application of pre-engineered, engineered, and special purpose pumps and systems.

Pumping Solutions
Flowserve is providing pumping solutions that permit customers to continuously improve productivity, profitability and pumping system reliability.

Market-Focused Customer Support
Product and industry specialists develop effective proposals and solutions directed toward market and customer preferences. They offer technical advice and assistance throughout each stage of the product life cycle, beginning with the inquiry.

Dynamic Technologies
Flowserve is without peer in the development and application of pump technology, including:
- Hydraulic engineering
- Mechanical design
- Materials science
- Intelligent pumping
- Manufacturing technology

Broad Product Lines
Flowserve offers a wide range of complementary pump types, from pre-engineered process pumps, to highly engineered and special purpose pumps and systems. Pumps are built to recognized global standards and customer specifications.

Pump designs include:
- Single-stage process
- Between bearing single-stage
- Between bearing multistage
- Vertical
- Submersible motor
- Positive displacement
- Nuclear
- Specialty





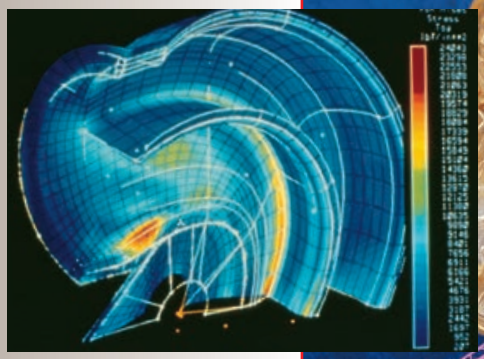



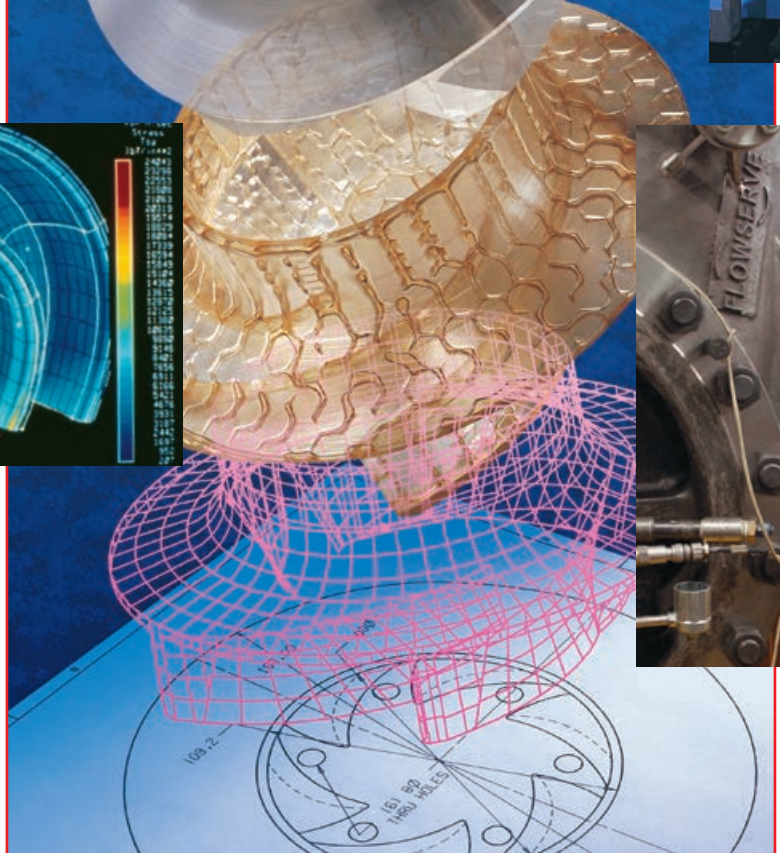

FRBH

Worthington® Heavy-Duty Paper Stock and Process Pump

A World Leader in Efficiency and Reliability

The Flowserve FRBH is one of the world's most efficient and reliable family of pumps — one that will perform effectively not only at the traditional best efficiency point but across a broad operating range. The high efficiency of the FRBH translates into reduced energy costs, an increasingly important factor as electric power becomes more costly.

The FRBH is capable of handling all types of stock up to 6% air dry consistency. Its unobstructed suction and large streamlined flow channel prevent clogging and air binding. Furthermore, the FRBH's steep head-capacity characteristic prevents driver overload and minimizes changes in flow, despite changes in system head.

Typical Applications

- Pulp and paper
  - Cellulose fiber slurries
  - Evaporators
  - Concentrator
  - Flash tanks
  - Condensate
  - Waste stock
  - Flotation cells
  - Black liquor
  - Shower
- Wet corn milling
- Light slurries
- Scrubber water
- Reverse osmosis
- Electrolyte
- Raffinate
- Deionized water
- Brine service
- Irrigation

Complementary Pump Designs

- Mark 3 ASME (ANSI) chemical process pump
- CPX ISO chemical process pump
- Type M hard metal abrasive slurry pump
- ERPN process pump
- LNN horizontal split case pump
- LR horizontal split case pump
- WDX multistage, segmental ring pump

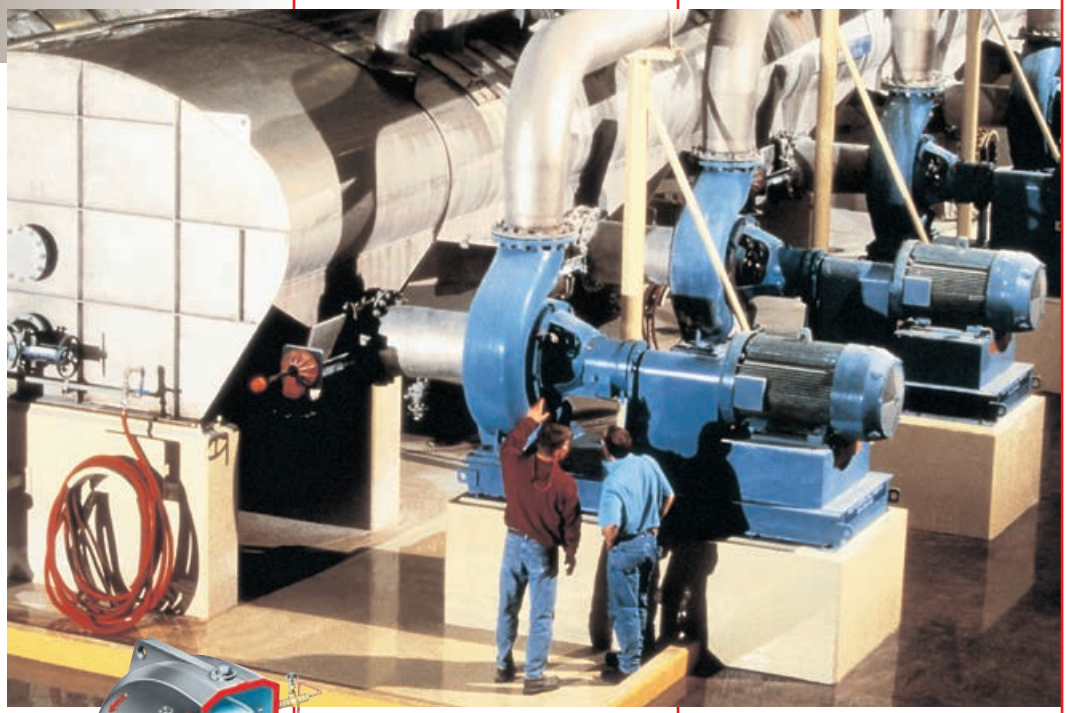

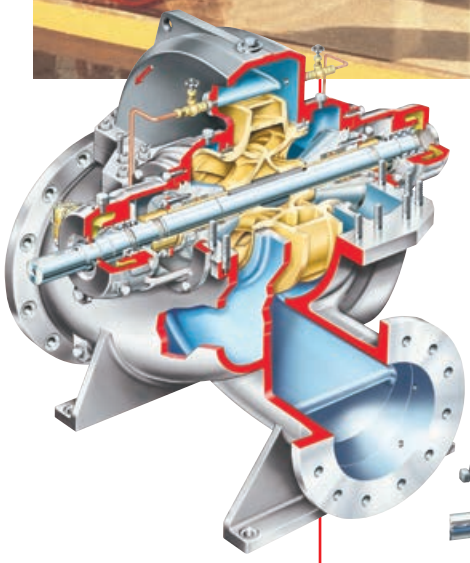

LNN

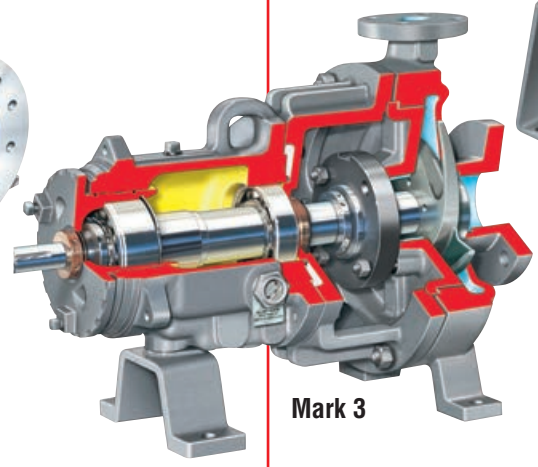

Mark 3

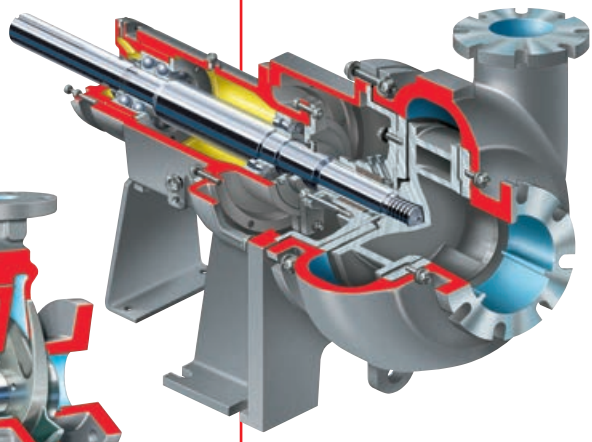

Type M

FLOWSERVE

FRBH

Worthington® Heavy-Duty Paper Stock and Process Pump

Because a stock pump must operate 24 hours a day, seven days a week, Flowserve designed the FRBH for maximum reliability and efficiency in demanding applications. The rugged construction and efficient operation of the FRBH result in reduced operating costs.

A proven performer, the FRBH is a horizontal, end suction, top centerline discharge pump. Discharge sizes available from 50 mm (2 in) up to 600 mm (24 in).

Operating Parameters

- Flows to 9085 m^3/h (40 000 gpm)
- Heads to 100 m (330 ft)
- Pressures to 14 bar (200 psi)
- Temperatures to 150°C (300°F)

Benefits of the FRBH

- Resistance to clogging in thick, pulpy mixtures
- Prevention of stock separation or dewatering
- Dependable bearing assembly
- Robust rotating element
- Corrosion and erosion resistance
- Ease of maintenance

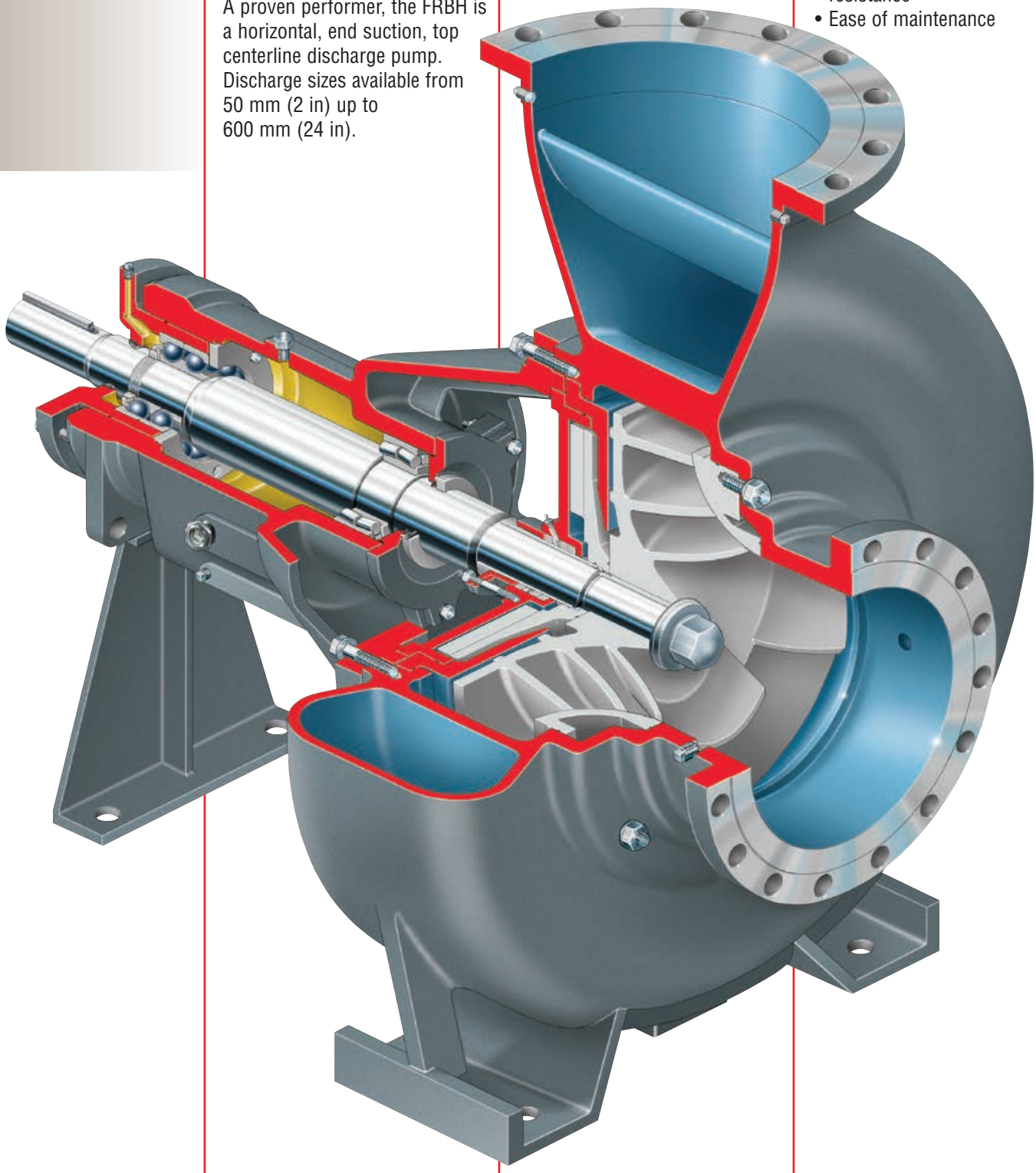



Self-venting, Top Centerline Discharge Casing *with unobstructed suction prevents trapped air to maintain efficiency and flow.*

Keyed Semi-open, Full Vane Impeller *prevents clogging in thick, pulpy applications and is less sensitive to end clearance adjustment. Recessed impeller available for low-shear applications.*

Back Pump-out Vanes *increase axial balance and reduce seal chamber pressure, prolonging seal life.*

Three-point, End-clearance Adjustment *resets impeller clearance to restore performance and efficiency.*

Extra Heavy-duty, Alloy Steel Shaft *minimizes problems associated with overhang, deflection and vibration. Stainless steel available.*

Contoured Wearplate *at the impeller suction side protects casing and prolongs pump efficiency.*

Suction and Discharge Flanges *conform to ASME B16.5 Classes 125 and 150.*

"Dry-shaft" Construction, *using sealed impeller nut and key-driven stainless steel hook sleeve, eliminates shaft corrosion.*

Mechanical Seals
The FRBH accepts single, double, tandem and split mechanical seals. Cartridge seals can be mounted over the standard pump sleeve or directly to the pump shaft.

Seal Housing design eliminates cavities and erosion areas.
- Sized for five rings of packing with multiple lantern ring positions
- Removable fully split and interlocking packing glands

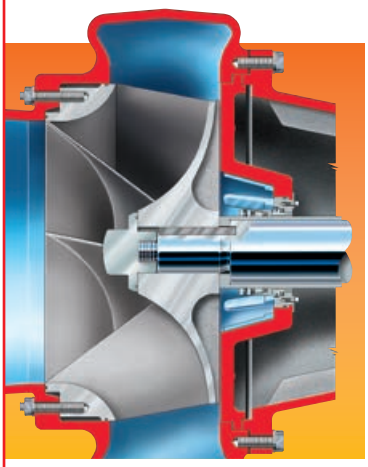

Optional Large Conical Seal Housing allows the seal to be installed in the liquid directly behind the impeller, eliminating the need for a separate seal water flushing source.

Rigid One-piece Bearing Frame ensures positive alignment and provides ample access to gland and seal chamber.
- Back pull-out configuration
- Oil or grease lubrication
- Spacious sump provides substantial oil reservoir
- Maximum surface area to facilitate heat dissipation
- Easy-to-read oil sight gauge
- Four rotating assemblies permit maximum interchangeability
- Labyrinth seals may be used to isolate bearings from contaminants

Heavy-duty Bearings
- Permanently aligned outboard double row bearings take thrust in either direction
- Single row deep-groove or double row spherical radial bearings
- Standard double lip seals



Optional Flow Inducer significantly improves suction performance by reducing pump NPSHR.



Optional Expeller forces fluid from the seal chamber, minimizing shaft wear. Positioned behind the impeller, the expeller eliminates the need for costly flush water and the resulting product dilution.

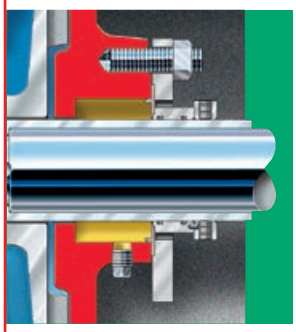

Optional FXP Seal may be used with expeller, instead of packing. At shutdown, process fluid forces elastomeric diaphragm closed, creating a static seal.

Options and Technical Data



FRBHJC Vertical Sump Pump Using the FRBH liquid end, Flowserve engineers developed the FRBHJC to handle corrosive liquids and thick, pulpy mixtures. Designed for long, trouble-free, low-cost operation, the energy-efficient FRBHJC is a true stiff-shaft cantilever design, without bottom bearing or flushing water.

FRBHJ Submerged Bearing Design is cast iron, or stainless steel, fitted with a rubber or urethane fluted bearing in a rigid stainless steel shell. Lubrication is from an external, clear liquid source.

FRBHJ Drivers may be direct coupled or V-belt for greater flexibility.

FRBH Options
- Recessed impeller
- Oil cooler
- Seal flush systems
- Vibration monitors
- Spring-mounted baseplates

Standard Materials of Construction

Component	Materials Classes							
	Cast Iron	CISSF	316	316L	317L	CD4MCu	CA6NM	Worthite™
Casing, Stuffing Box Head, Wearplate	Cast Iron		316	316L	317L	CD4MCu	CA6NM	Worthite
Impeller	Cast Iron	316		316L	317L	CD4MCu	CA6NM	Worthite
Shaft	1045 Steel					316	Steel	316
Gland Set	316				Alloy 20		317L	Alloy 20
Seal Cage Set	317L				Alloy 20		317L	Alloy 20
Stuffing Box Bushing	316				317L	Alloy 20	317L	Alloy 20
Bearing Frame	Cast Iron							
Thrust Bearing Housing	Cast Iron							

Optional Close Coupled Configuration

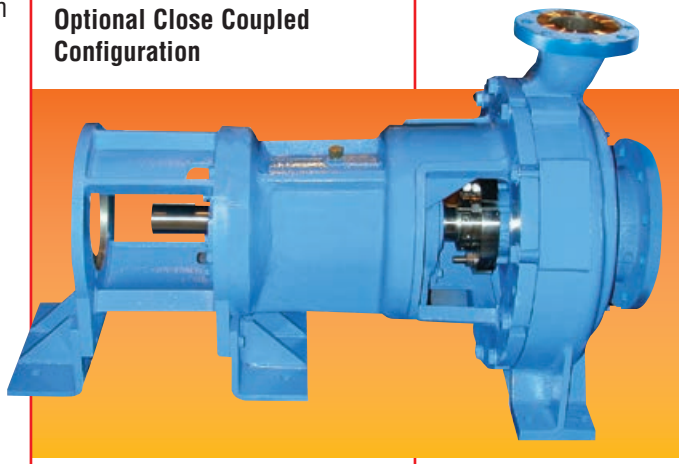

FRBH Range Chart

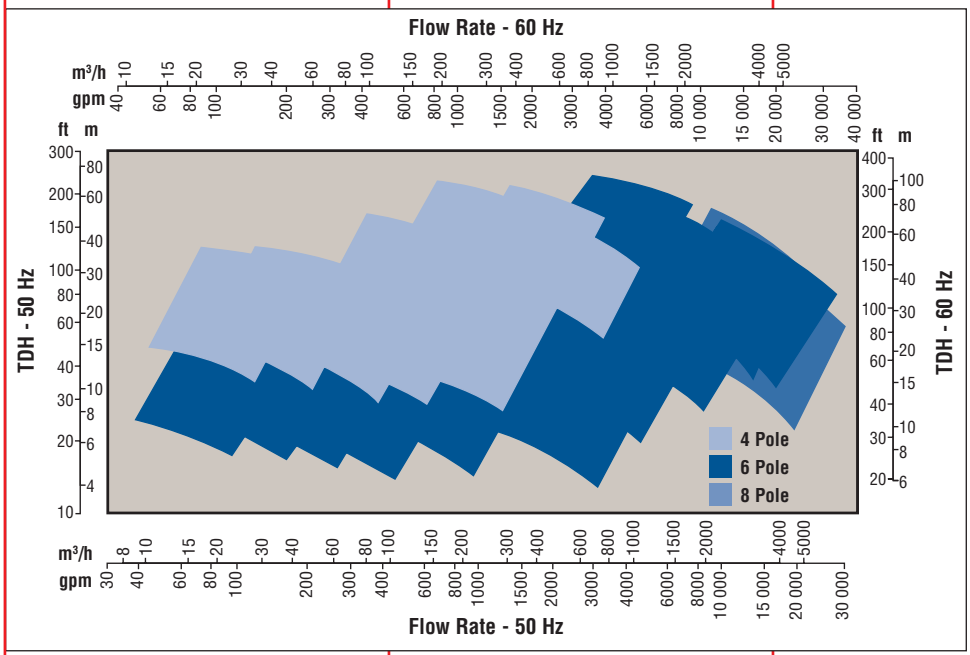

Global Engineered Services and Support

Total Cost Reduction

Asset Management

Product Life Cycle

Performance Re-rates

Site Diagnostics

Repair Services

Energy Management

Spare Parts

Maintenance Contracts

Materials Upgrades

Turnkey Services

Field Repairs

Installation

Project Supervision

Commissioning

Equipment Upgrades

Condition Monitoring

Systems Analysis

Field Machining

Service Dedication
Flowserve Engineered Services is focused on providing customers with uncompromising service and support, where and when needed. Dedicated to delivering the highest quality support, Engineered Services integrates its extensive pump and materials engineering knowledge with creative service solutions. Engineered Services fully understands the business challenges facing customers and is prepared to manage solutions to succeed as a team.

A worldwide network of service and repair centers staffed by highly skilled engineers and technicians is available around the clock, seven days a week to respond to customer queries, evaluate and troubleshoot problems and provide reliable solutions.

Strength of Experience, Commitment to Excellence
Flowserve has long served industries requiring superior equipment performance and service life.

- Oil and gas production
- Hydrocarbon processing
- Chemical processing
- Water resources
- Power generation
- Nuclear
- Mining and mineral processing
- Pulp and paper
- General industry

Engineered Services is dedicated to maximizing equipment performance and providing reliability-centered maintenance programs for pumps and related equipment, regardless of manufacturer. Using the FlowStar™ asset management software, Engineered Services tracks performance and supports improvement programs using a service life cycle cost business approach. The results are improved reliability and increased profitability.

Business Partner
Flowserve partners with customers to respond to the dynamic business conditions that affect them. Flowserve will work with customers to drive efficiency, maximize throughput and control process quality. Whether user needs involve on-site technical assistance or broader project planning with full turnkey responsibility, Flowserve Engineered Services will deliver professional, reliable results.



Flowserve… Supporting Our Customers With The World's Leading Pump Brands



USA and Canada
Flowserve Corporation
5215 North O'Connor Blvd.
Suite 2300
Irving, Texas 75039-5421 USA
Telephone: +1 937 890 5839

Europe, Middle East, Africa
Flowserve Corporation
Parallelweg 13
4878 AH Etten-Leur
The Netherlands
Telephone: +31 76 502 8100

FLOWSERVE®

Your local Flowserve representative:

To find your local Flowserve representative, please use the Sales Support Locator System found at www.flowserve.com or call: +1 937 890 5839.

Latin America
Flowserve Corporation
Martín Rodriguez 4460
B1644CGN-Victoria-San Fernando
Buenos Aires, Argentina
Telephone: +54 11 4006 8700
Telefax: +54 11 4714 1610

Asia Pacific
Flowserve Pte. Ltd.
10 Tuas Loop
Singapore 637345
Telephone: +65 6771 0600
Telefax: +65 6862 2329

January 2014
© 2014 Flowserve Corporation