FLOWSERVE®

Installation Instructions

Durametallic® Double CRO

Dual single coil spring friction drive for applications with water lubrication properties

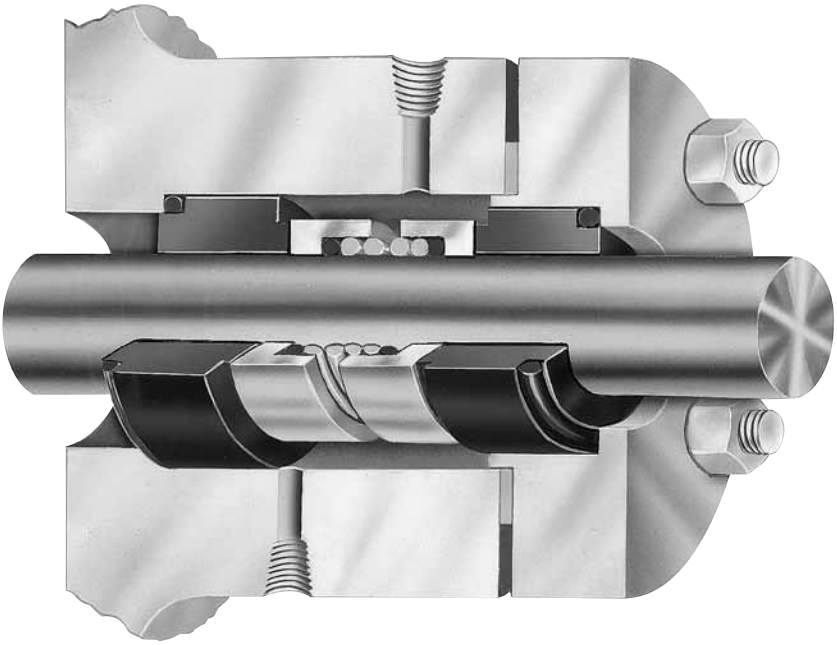

Experience In Motion

1 Equipment Check

1.1 **Follow plant safety regulations**:
- lock out motor and valves.
- wear designated personal safety equipment.
- relieve any pressure in system.
- consult plant MSDS files for hazardous material regulations.

1.2 **Adjust the bearings, coupling, and impeller** so that the shaft is in its operating axial position. **Disassemble equipment to allow access to seal installation area**.

1.3 **Remove all burrs and sharp edges** from the shaft, sleeve, seal housing bore and face, keyways, and any other feature that may contact sealing gaskets. Replace worn components. Clean all piping plans.

1.4 **Check requirements** for shaft, sleeve, and seal housing. See Figure 1.

Seal Chamber Requirements Figure 1

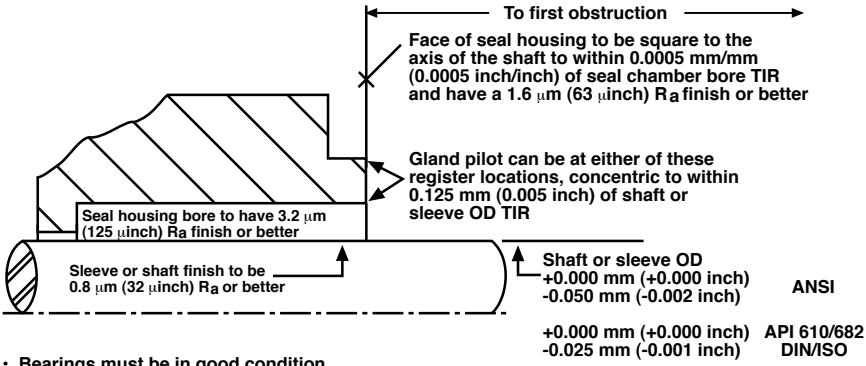

- **Bearings must be in good condition**
- **Maximum lateral or axial movement of shaft (end play) = 0.25 mm (0.010 inch) TIR**
- **Maximum shaft runout at face of seal housing = 0.05 mm (0.002 inch) TIR**
- **Maximum dynamic shaft deflection at seal housing = 0.05 mm (0.002 inch) TIR**

1.5 **Check assembly drawing** included with the Double CRO seal for specific seal design, materials of construction, dimensions, and piping connections.

1.6 **Check shaft or sleeve OD, box depth, box bore, and distance to the first obstruction** to ensure that they are dimensionally the same as shown on the seal assembly drawing.

The images of parts shown in these instructions may differ visually from the actual parts due to manufacturing processes that do not affect the part function or quality.

1.7 **Check gland pilot and bolt holes** to ensure they are adaptable to the equipment and are the same as shown on the assembly drawing.

1.8 **Handle all seal parts with care**, they are manufactured to precise tolerances. The seal faces; rotating face and stationary face, are of special importance. These two sealing faces are lapped flat to within three light bands (34.8 millionths of an inch).
Keep the seal faces perfectly clean at all times.

1.9 **Do not use oil or silicone lubricant** on the shaft or sleeve of this friction driven seal. Use water or a mild water soluble soap solution to ease installation.

2 Installation on Single End Suction Vertical Split Case and Vertical In-Line Pumps (1 seal chamber)

2.1 **Lubricate** one of the two **stationary face seat gasket O-rings** with water or mild water soluble soap solution and **nest this O-ring in the gland cavity**. **Press the stationary face into the gland** with the sealing face orientated toward the inboard side of the gland. Use hand pressure only. **Position the gland over the shaft** or sleeve with the sealing face orientated toward the seal chamber (stuffing box). Place the gland as close to the bearing bracket as possible. Do not bump the stationary face against the shaft as it may chip, crack, or break.

2.2 **Lubricate the shaft** or sleeve with water or soap solution.

2.3 Install the **rotating seal parts on the shaft or sleeve** one piece at a time:
- **Outer rotating face** with **rotating face gasket O-ring.**
- **Single coil spring**.
- **Inner rotating face** with **rotating face gasket O-ring.**

The rotating seal parts should be as close to their final axial position as possible with the rotating face sealing surfaces facing away from the spring and toward the stationary face sealing surfaces.

2.4 **Lubricate the seal chamber bore** with water or soap solution. The seal chamber is usually the stuffing box contained in the pump back plate.

2.5 **Lubricate the other stationary face seat gasket O-ring** with water or soap solution and place this O-ring on the back shoulder of the remaining stationary face. **Slide the inner stationary face** with the O-ring into position at the bottom of the chamber.

2.6 **Wipe the seal faces clean** with alcohol. Seal faces should not be lubricated but should be left clean and dry.

Caution: Consult material safety data sheets for proper handling of alcohol.

2.7 **Install the seal chamber (pump back-plate) and assemble the pump. Position the gland** to the face of the seal housing. Be sure the gland pilot is properly engaged. **Tighten the gland stud nuts** evenly, cross stagger the adjustment of the nuts. Follow the equipment manufacturer's recommendation for gland stud nut torque. In the absence of recommendations, gland stud nuts should only be torqued to establish a leak tight seal at the gland gasket. Proper land bolt adjustment is especially important with clamp style inserts where torque may damage the insert. In this case, gland stud nuts should be torqued to a maximum of 13.5 N-m (10 ft-lbs).

2.8 See **section 4, Operational Recommendations,** before starting pump.

3 Double Suction and Multistage Horizontal Split Case Pumps (2 seal chambers)

Note: The parting **gasket** between the upper and lower sections of the pump casing **must be flush** with the seal chamber bore and face or leakage will occur past the O-rings and gaskets.

3.1 **Lubricate the shaft** or sleeve and **the seal chamber bore** with water or a mild water soluble soap solution.

3.2 **Lubricate one stationary face seat gasket O-ring** with water or soap solution and place this O-ring on the back shoulder of the inner stationary face. **Slide the stationary face** with the O-ring into position at the bottom of the chamber. Do not bump the stationary face against the shaft as it may chip, crack, or break.

3.3 **Install the rotating seal parts on the shaft or sleeve** one piece at a time:

- **Inner rotating face** with **rotating face gasket O-ring.**
- **Single coil spring.**
- **Outer rotating face** with **rotating face gasket O-ring.**

3.4 **Wipe the seal faces clean** with alcohol. Seal faces should not be lubricated but should be left clean and dry. **Position the rotating seal parts** as close to their final axial position as possible with the inner rotating face sealing surface in contact with the inner stationary sealing face.

Caution: Consult material safety data sheets for proper handling of alcohol.

3.5 **Lubricate** the remaining **stationary face seat gasket O-ring** with water or soap solution and **nest this O-ring in the gland cavity**. **Press the stationary face into the gland** with the stationary sealing face orientated toward the inboard side of the gland. Use hand pressure only. Wipe the sealing face clean with alcohol.

3.6 **Position the gland over** the shaft or sleeve with the stationary face oriented toward the seal chamber (stuffing box). Do not bump the stationary face against the shaft as it may chip, crack, or break. With the gland and/or stationary face pilot properly engaged, tighten the **gland stud nuts** up evenly, cross staggering the adjustment of the nuts. The gland nuts should be torqued to a maximum of 13 N-m (10 ft-lbs). Excessive gland nut pressure can result in distortion of the stationary face. **Adjust the bearings, coupling, and impeller** so that the shaft is in its operating axial position. The rotating seal parts will automatically position themselves, subsequent axial adjustment of the shaft does not require resetting of the seal.

3.7 See **section 4, Operational Recommendations,** before starting pump.

4 Operational Recommendations

4.1 **Do not start up the equipment dry**. Vent air from the casing of the pump and the seal chamber before startup.

4.2 If soap was used to ease seal installation, **flush the seal chamber** with water before startup to prevent rotating face gasket O-ring slippage and subsequent loss of seal drive.

4.3 Adjust the barrier water flow rate so there is no more than a 11°C (20°F) temperature rise between inlet and outlet temperature. The barrier outlet water temperature should never exceed 51°C (120°F). Consult Flowserve if you have any questions.

4.4 If the seal runs hot, above 51°C (120°F) or squeals, shut down the pump immediately as not to damage the seal. Check to see if the barrier water supply is working properly. If barrier water system is working correctly, check the seal housing dimension to ensure the seal is not over-compressed due to axial dimensional stack up problems.

For special problems encountered during installation, contact your nearest Flowserve Sales and Service Representative or Authorized Distributor.

Suggested Barrier Water Supply System - Plan 53A Figure 2

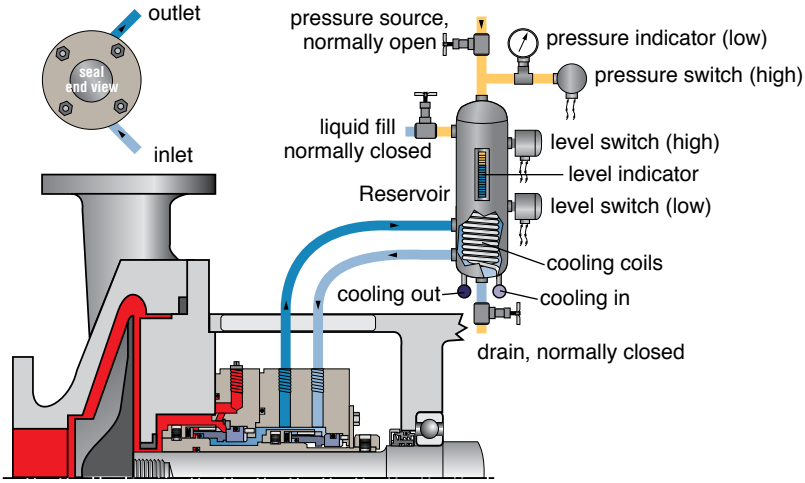

5 Repairs

This product is a precision sealing device. The design and dimension tolerances are critical to seal performance. Only parts supplied by Flowserve should be used to repair the seal. These parts are available from numerous Flowserve stocking locations. To order replacement parts, refer to the part code number and B/M number. A spare backup seal should be stocked to reduce repair time. The following partscan also be stocked for emergency needs.

Rotating Faces	Spring
Rotating Face Gasket O-rings	Gland Gaskets
Stationary Faces	Stationary Face Seat Gasket O-rings

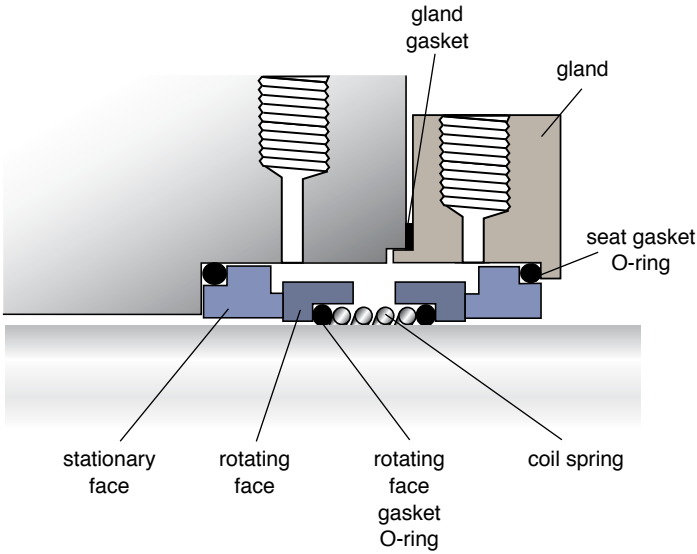

When repairs are not conducted at the customer's location, **decontaminate the seal assembly** and return it to Flowserve, with an order marked **"Repair or Replace"**. **A signed certificate of decontamination** must be attached. **A Material Safety Data Sheet (MSDS) must be enclosed** for any product that came in contact with the seal. The seal assembly will be inspected and, if repairable, it will be rebuilt, tested, and returned in its original condition.

TO REORDER REFER TO
B/M #_____
F.O. _____

FIS133eng 10/13 Printed in USA

To find your local Flowserve representative
and find out more about Flowserve Corporation,
visit www.flowserve.com

USA and Canada
Kalamazoo, Michigan USA
Telephone: 1 269 381 2650
Telefax: 1 269 382 8726

Europe, Middle East, Africa
Roosendaal, the Netherlands
Telephone: 31 165 581400
Telefax: 31 165 554590

Asia Pacific
Singapore
Telephone: 65 6544 6800
Telefax: 65 6214 0541

Latin America
Mexico City
Telephone: 52 55 5567 7170
Telefax: 52 55 5567 4224